Improvements of DDRiB

1. Performance
2. Installation
3. Maintenance
4. Reliability

2018.5.24
Robodrill Laboratory
A-97152-00190

1. Performance

Performance Improvement of DDRiB

DDRiB / DDR-TiB

Additional 1-axis rotary table with DD motor

DDRiB

- NEW Rigidity up by optimizing casting design
- NEW Indexing time reduction by new clamping unit
  Unclamp⇒180°index⇒Clamp
  0.85 s ⇒ ***0.55 s***
- NEW Clamp torque up
  500 N･m ⇒ ***700 N･m*** (at air supply 0.5MPa)

DDR-TiB

- NEW Rigidity up by optimizing casting design
- NEW Loading capacity up
  150 kg ⇒ ***200 kg***
- NEW Clamp torque up
  700 N･m ⇒ ***1100 N･m*** (at air supply 0.5MPa)

Cycle time reduction and expanding application range

2. Installation

Easy installation of DDRiB

Improve workability of cable forming and connection

DDR (current)

3 cables

30min

DDRiB (new)

2 cables

25min

⇒Easy forming

Reduction in number of cables
Improvement of cable forming

DDR (current)

5min

I/O line

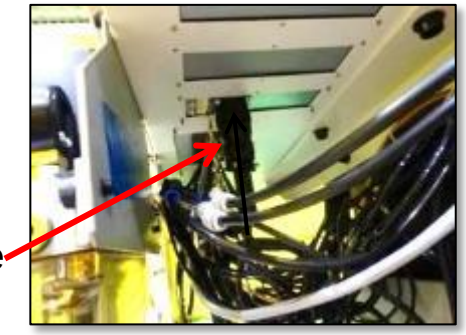

+

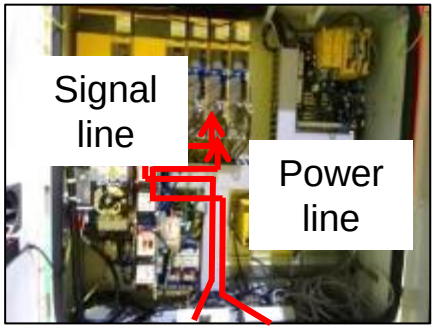

DDRiB (new)

1min

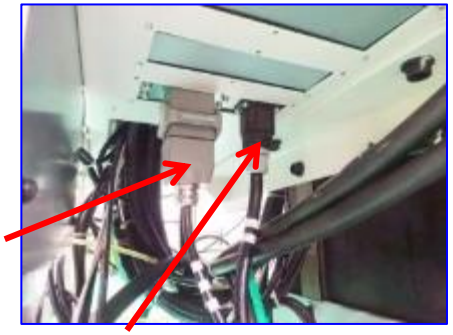

Power line

I/O,Sinal line

Wiring all cables outside of the controller cabinet
Easy cable connection

3. Maintenance

Short maintenance time by unitizing clamping mechanism

Improve workability of cable forming and connection

DDR (Current)

0.3h

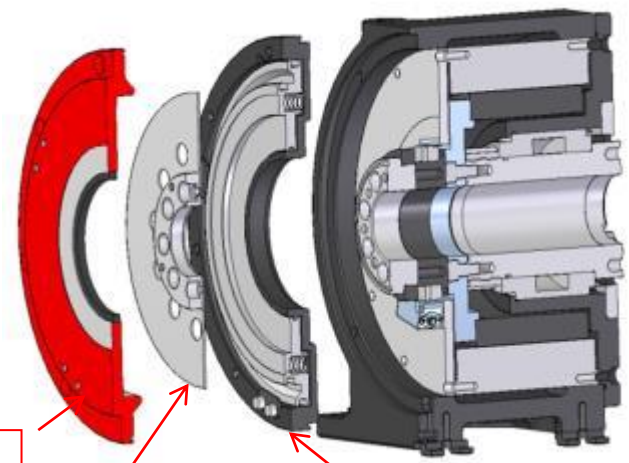

DDRiB (new)

0.1h

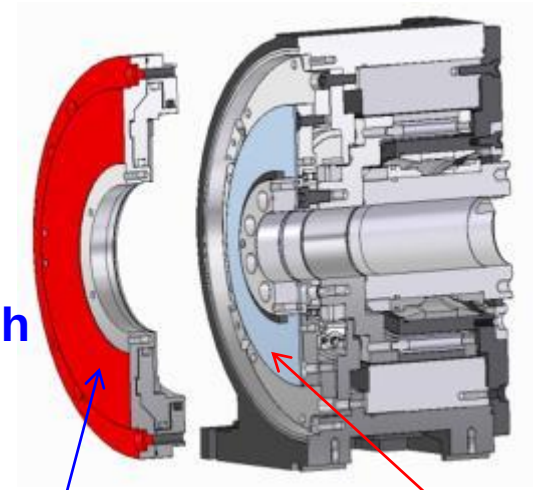

Unitization of rear plate and cylinder unit

4. Reliability（1／2）

Measures against poor air quality of DDRiB

- Reduce the volume of air used for clamp operation to 1/2
  ⇒The amount of moisture(water) that pass though the solenoid valve decreases, and the life of the solenoid valve is prolonged
- Size up of solenoid valve
  ⇒Even when water and oil adhere to the solenoid valve, it is easy to operate

➡ Increasing life of the solenoid valve

DDR

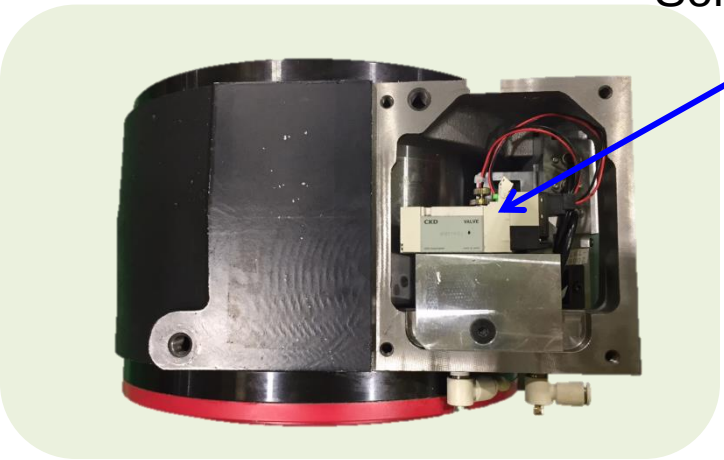

Solenoid valve

DDRiB

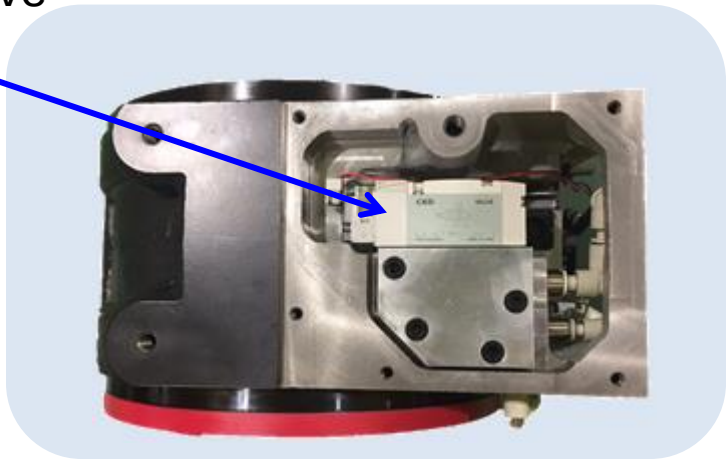

4. Reliability（2／2）

The exhaust structure to the outside of DDRiB

DDR

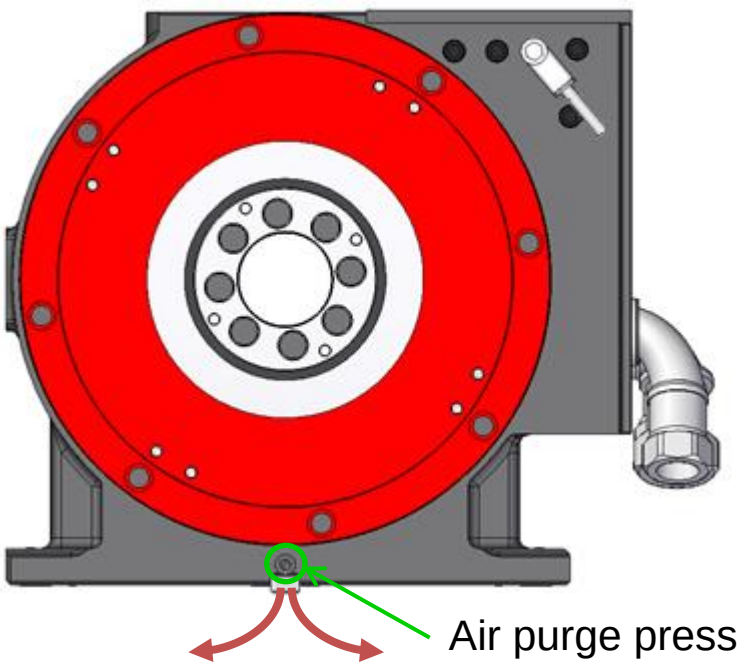

DDRiB

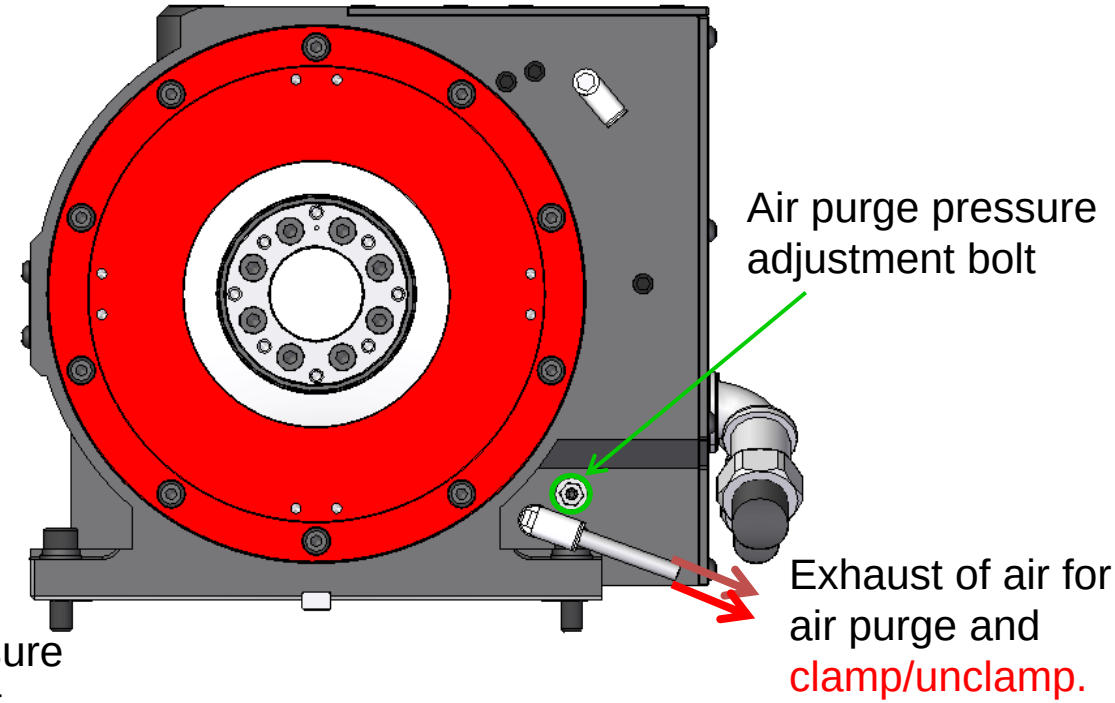

- Air for clamp/unclamp is directly exhausted to outside of DDRiB.
  - ⇒ Shortening clamp/unclamp time
  - ⇒ High frequency operation of clamp/unclamp has no effect on internal pressure.